SCALEXTRIC

VANWALL
2½ Litre 4 Cylinder 1959 Model

See overleaf for BRM

As produced from 1992

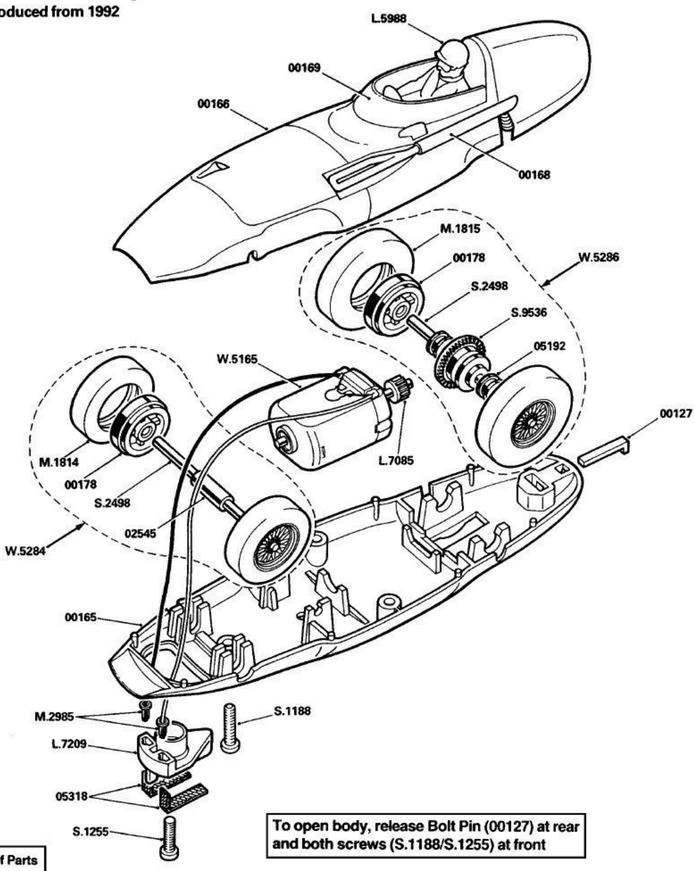

To open body, release Bolt Pin (00127) at rear and both screws (S.1188/S.1255) at front

List of Parts

Ref. No.	Item	Ref. No.	Item	Ref. No	Item
W.5165	Motor with Pinion and Harness .	M.1814	Front Tyre	00127	Bolt Pin
W.5284	Front Axle Assembly	M.1815	Rear Tyre	00165	Underpan
W.5286	Rear Axle Assembly	M.2985	Eyelet	00166	Body
				00168	Exhaust Pipe
L.5988	Drivers Head			00169	Windscreen
L.7085	Pinion	S.1188	Screw — Body Fixing	00179	Hub
L.7209	Guide Blade	S.1255	Screw — Guide Blade	02545	Front Axle Spacer
		S.2498	Axle	05192	Rear Axle Bearing
		S.9536	Contrate Gear	05318	Braid

HORNBY HOBBIES

Westwood, Margate,
Kent, CT9 4JX, England.

SERVICE SHEET No. 164
Issued August 1992

SCALEXTRIC

BRM
2½ Litre 1959 Model

See overleaf for Vanwall

As produced from 1992

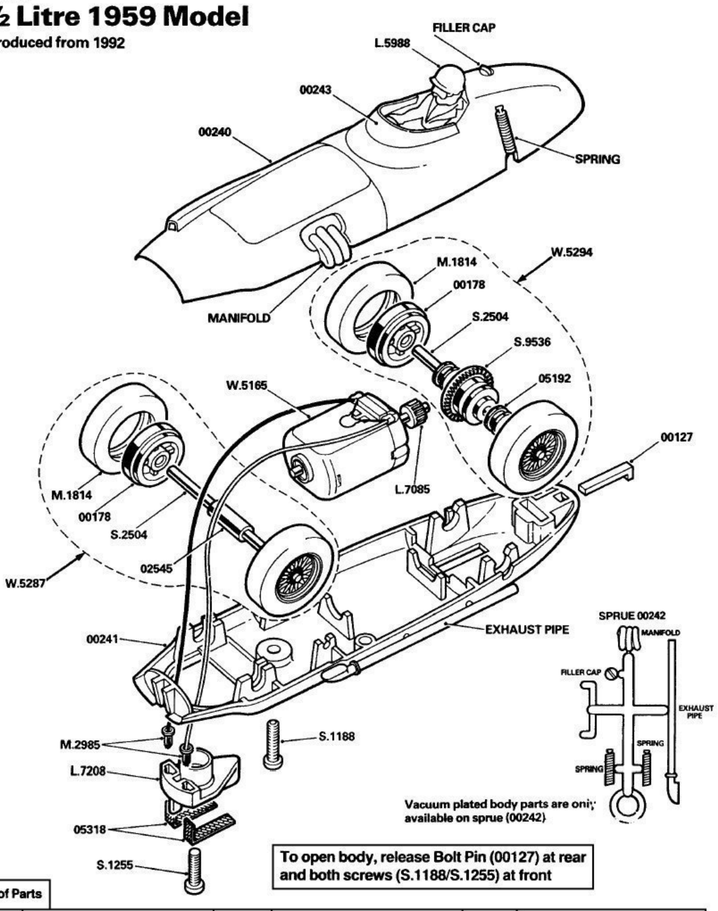

Vacuum plated body parts are only available on sprue (00242)

To open body, release Bolt Pin (00127) at rear and both screws (S.1188/S.1255) at front

List of Parts

Ref. No.	Item	Ref. No.	Item	Ref. No.	Item
W.5165	Motor with Pinion and Harness .	M.2985	Eyelet	00127	Bolt Pin
W.5287	Front Axle Assembly			00178	Hub
W.5294	Rear Axle Assembly			00240	Body
		S.1188	Screw — Body Fixing	00241	Underpan
L.5988	Drivers Head	S.1255	Screw — Guide Blade	00242	Vacuum Plated Sprue
L.7085	Pinion	S.2504	Axle	00243	Windscreen
L.7208	Guide Blade	S.9536	Contrate Gear	02545	Front Axle Spacer
				05192	Rear Axle Bearing
M.1814	Tyre			05318	Braid

HORNBY HOBBIES

Printed in England